Chapter 5 Precautions for Use

This chapter describes precautions for actual operation of the IGBT module.

1. Maximum Junction Temperature $T_{j(max)}$

As described in specification sheet, this automotive IGBT module can be used under T_j=175°C. However, if junction temperature under operation were excessed over the maximum ratings, the products life time degradation might be happened by expediting thermal fatigue destruction. Therefore, to keep safety operation, please use the product under suitable operating conditions.

2. Short-circuit Protection

When IGBT is to be short-circuit state, Collector current is increased and V_{CE} voltage is rapidly increased. From this characteristics, although Collector current is limited certain level under short-circuit state, high power due to high voltage and high current is apply to the IGBT at this moment. Therefore, this severe state should be removed as soon as possible.

An example by using gate driver IC which has short-circuit protection function is shown in chapter 7, please refer it.

As it is explained in chapter 1, this IGBT module has on-chip current detecting sensor. Its function and characteristics are shown in chapter 8.

So please use this on-chip sensor for short-circuit protection function suitably.

On the other, because this IGBT module does not have corrector voltage detecting point on each arm, desaturation type of short-circuit protection method shall not be used to avoid any unexpected trouble.

3. Overvoltage Protection and Safety Operation Area

3.1 Overvoltage protection

Because switching speed of IGBT is very fast, large di/dt is produced in turn-off operation or reverse recovery. So from this large di/dt and inductance component included in this module surge voltage is produced. If this surge voltage is excessed the device breakdown voltage, the device is in overvoltage state and it would be destructed in the worst case. Followings are some examples to avoid this kind of worst case:

1) Add snubber circuit 2) Tune the gate resistance 3) Reduce inductance in the main circuit

Images of turn-off waveform and reverse recovery waveform are shown in Fig. 5-1 and surge voltage is defined.

(a) Turn-off (b) Reverse recovery

Fig. 5-1 Turn-off waveform, reverse recovery waveform and surge voltage

Some examples of actual surge voltage by using 6MBI800XV-075V are explained below.

Fig. 5-2 shows an example of surge voltage dependence of collector current. In generally, the larger collector current makes the larger surge voltage at the turn-off. On the other hand, the larger collector current is produced the smaller surge voltage on reverse recovery.

Fig. 5-3 shows an example of surge voltage of reverse recovery dependence of gate resistor.

As explained above, surge voltage produced by IGBT module is not only depend on circuit inductance but also many of operating conditions like V_{CC} and circuit parameters like gate resistor.

Therefore, when IGBT module is employed to actual equipment, it is need to confirm that surge voltage on all of operating conditions is to be within RBSOA on actual system like invertor. If surge voltage is excess guaranteed RBSOA, surge voltage shall be suppressed by adding snubber circuit, by reducing stray inductance, by tuning gate resistors and so on. In addition, when surge voltage is reduced by gate resistor, it is able to be effective operating condition to independently tune the gate resistor of turn-on and turn-off, respectively.

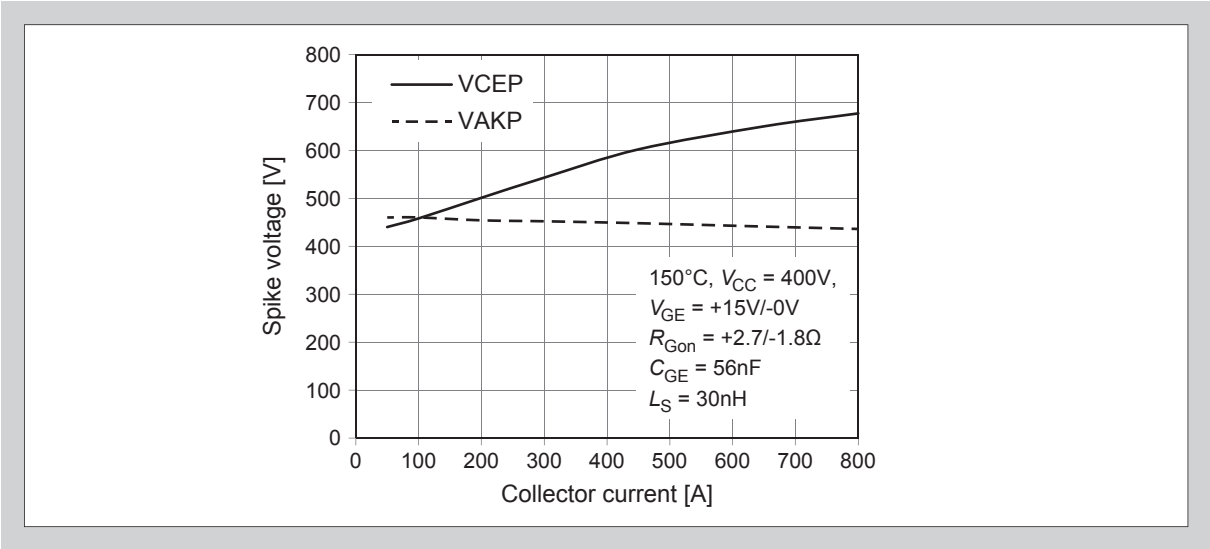

Fig. 5-2 An example of surge voltage dependence of collector current

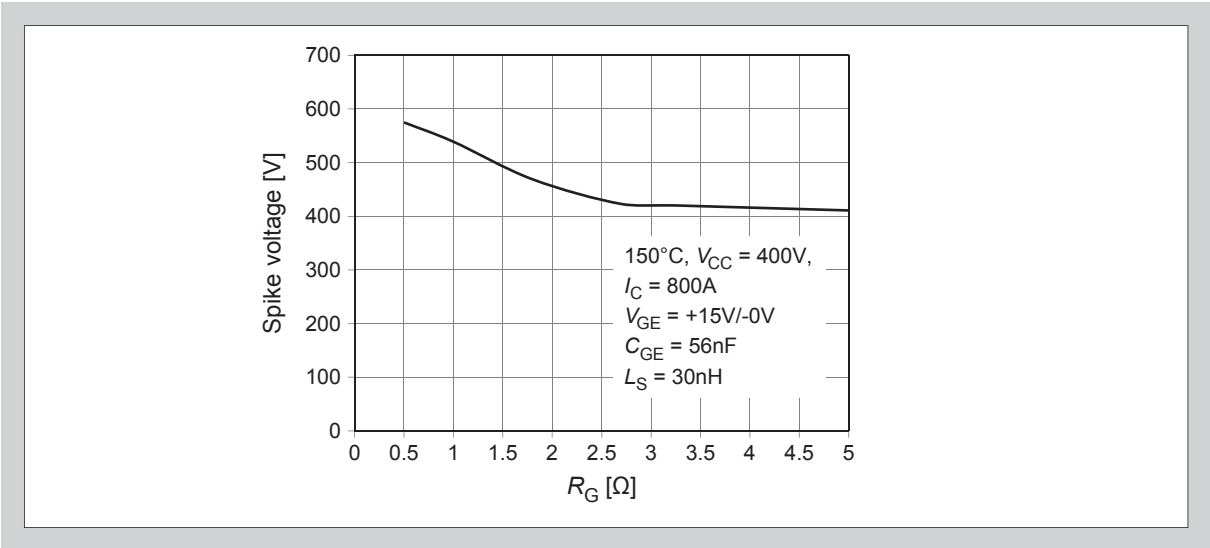

Fig. 5-3 An example of surge voltage of reverse recovery dependence of gate resistor

3.2 Surge voltage of turn-off dependence of gate resistor

Relating to overvoltage protection, an example of the surge voltage dependence of gate resistor is shown in Fig. 5-4.

In generally, a methodology, which the larger resistor is applied to suppress surge voltage, had been used. However, according to generation changing of IGBT chip itself, the surge voltage characteristics is also being changed. Therefore, when gate resisters is tuned, sufficient confirmation on actual system shall be needed.

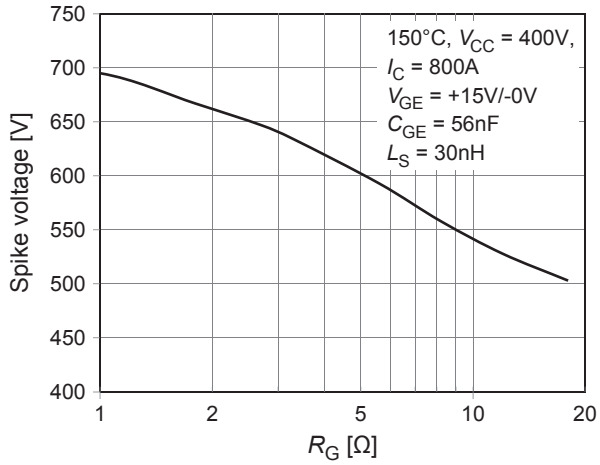

Fig. 5-4 An example of surge voltage of turn-off dependence of gate resistor

3.3 Safety operation area (SOA) of FWD part

As same as RBSOA of IGBT, SOA of FWD part is also defined. SOA of diode is defined as acceptable area of maximum power (P_{max}) which is the product of current and voltage during reverse recovery operation. Therefore, any system shall be designed that locus of current and voltage during reverse recovery should be within SOA.

An example of SOA of FWD part of 6MBI800XV-075V is shown in Fig. 5-5.

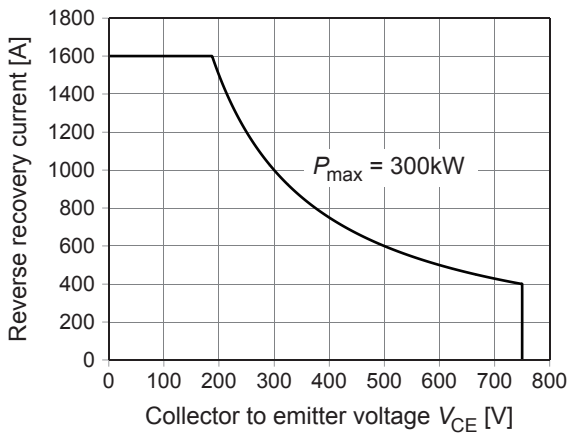

Fig. 5-5 An example of SOA of FWD part

3.4 Dynamic avalanche phenomenon

It is explained in previous section that V_{CE} is increased when turn-off operation is performed. And if V_{CE} is excessed certain voltage, V_{CE} voltage is suppressed. One of typical example of this phenomenon is shown in Fig.5-6. This phenomenon is called Dynamic avalanche.
If this dynamic avalanche is happened, spike voltage of V_{CE} is suppressed by the decreased turn-off current. The certain operating conditions which happen dynamic avalanche shall not be applied because there is possibility of IGBT destruction by turn-off loss increase and latch-up phenomenon. There are many causes of dynamic avalanche like long wiring of main circuit. To prevent this dynamic avalanche, IGBT module shall be used within RBSOA condition, at least.

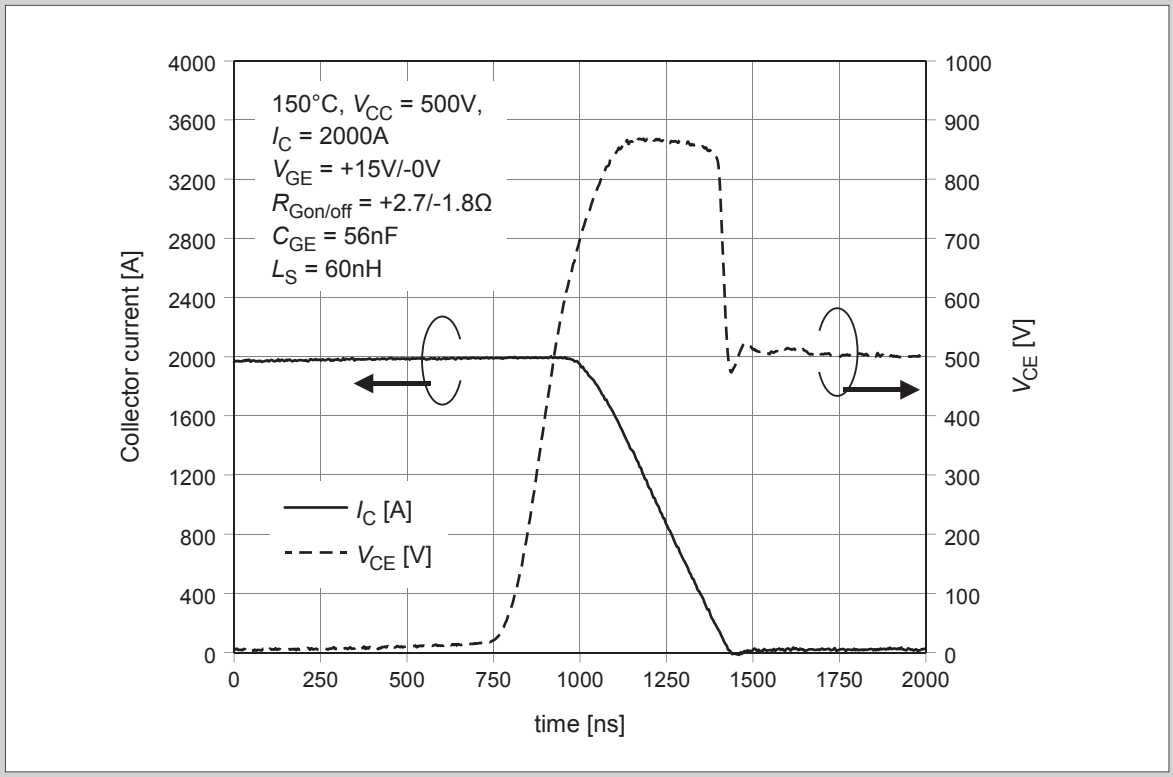

Fig. 5-6 An example of dynamic avalanche waveform

4. Operation Condition and Dead Time Setting

Since principal characteristics of IGBT depend on driving conditions like V_{GE} and R_G , certain setting according to target design is needed. Gate bias condition and dead time setting are described here.

4.1 Forward bias voltage : $+V_{GE}$ (on state)

Notes when $+V_{GE}$ is designed are shown as follows.

(1) Set $+V_{GE}$ so that is remains under the maximum rated G-E voltage, V_{GES} =±20V.

(2) It is recommended that supply voltage fluctuations are kept to within ±10%.

(3) The on-state C-E saturation voltage $V_{CE(sat)}$ is inversely dependent on $+V_{GE}$, so the greater the $+V_{GE}$ the smaller the $V_{CE(sat)}$.

(4) Turn-on switching time and switching loss grow smaller as $+V_{GE}$ rises.

(5) At turn-on (at FWD reverse recovery), the higher the $+V_{GE}$ the greater the likelihood of surge voltages in opposing arms.

(6) Even while the IGBT is in the off-state, there may be malfunctions caused by the dv/dt of the FWD's reverse recovery and a pulse collector current may cause unnecessary heat generation. This phenomenon is called a dv/dt shoot through and becomes more likely to occur as $+V_{GE}$ rises.

(7) The greater the $+V_{GE}$ the smaller the short circuit withstand capability.

4.2 Reverse bias voltage : $-V_{GE}$ (off state)

Notes when $-V_{GE}$ is designed are shown as follows.

(1) Set $-V_{GE}$ so that it remains under the maximum rated G-E voltage, V_{GES} =±20V .

(2) It is recommended that supply voltage fluctuations are kept to within ±10%.

(3) IGBT turn-off characteristics are heavily dependent on $-V_{GE}$, especially when the collector current is just beginning to switch off. Consequently, the greater the $-V_{GE}$ the shorter, the switching time and the switching loss become smaller.

(4) If the $-V_{GE}$ is too small, dv/dt shoot through currents may occur, so at least set it to a value greater than -5V. If the gate wiring is long, then it is especially important to pay attention to this.

4.3 Avoid the unexpected turn-on by recovery dv/dt

In this section, the way to avoid the unexpected IGBT turn-on by dv/dt at the FWD's reverse recovery will be described.

Fig.5-7 shows the principle of unexpected turn-on caused by dv/dt at reverse recovery. In this figure, it is assumed that $IGBT_1$ is turned off to on and gate to emitter voltage V_{GE} of $IGBT_2$ is negative biased. In this condition, when $IGBT_1$ get turned on from off-state, FWD on its opposite arm, that is, reverse recovery of FWD_2 is occurred. At same time, voltage of $IGBT_2$ and FWD_2 with off-state is raised. This causes the dv/dt according to switching time of $IGBT_1$. Because $IGBT_1$ and $IGBT_2$ have the mirror capacitance C_{GC}, Current is generated by dv/dt through C_{GC}. This current is expressed by C_{GC} x dv/dt. This current is flowed through the gate resistance R_G, results in increasing the gate potential. So, V_{GE} is generated between gate to emitter. If V_{GE} is excess the sum of reverse biased voltage and $V_{GE(th)}$, $IGBT_2$ is turned on. Once $IGBT_2$ is turned on, the short-circuit condition is happened, because both $IGBT_1$ and $IGBT_2$ is under turned-on state.

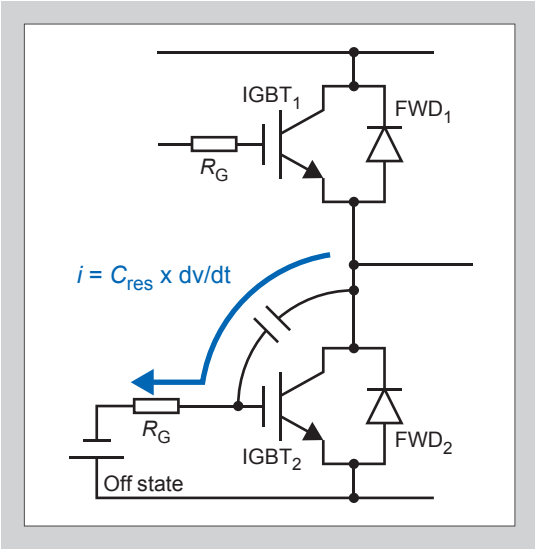

Fig. 5-7 Dead time timing chart

4.4 Dead time setting

For inverter circuits and the like, it is necessary to set an on-off timing "delay" (dead time) in order to prevent short circuits. During the dead time, both the upper and lower arms are in the "off" state. Basically, the dead time (see Fig.5-8) needs to be set longer than the IGBT switching time (t_{off} max.). For example, if R_G is increased, switching time also becomes longer, so it would be necessary to lengthen dead time as well. Also, it is necessary to consider other drive conditions and the temperature characteristics.

It is important to be careful with dead times that are too short, because in the event of a short circuit in the upper or lower arms, the heat generated by the short circuit current may destroy the module. Therefore, appropriate dead time should be settled by the confirmation of practical machine.

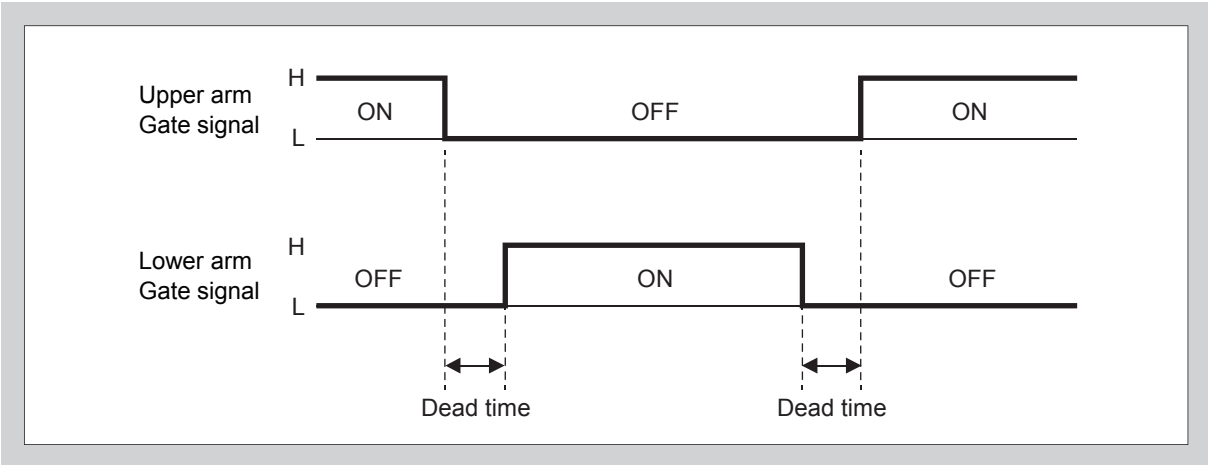

Fig. 5-8 Dead time timing chart