■ Dimensions unit: inch (mm)
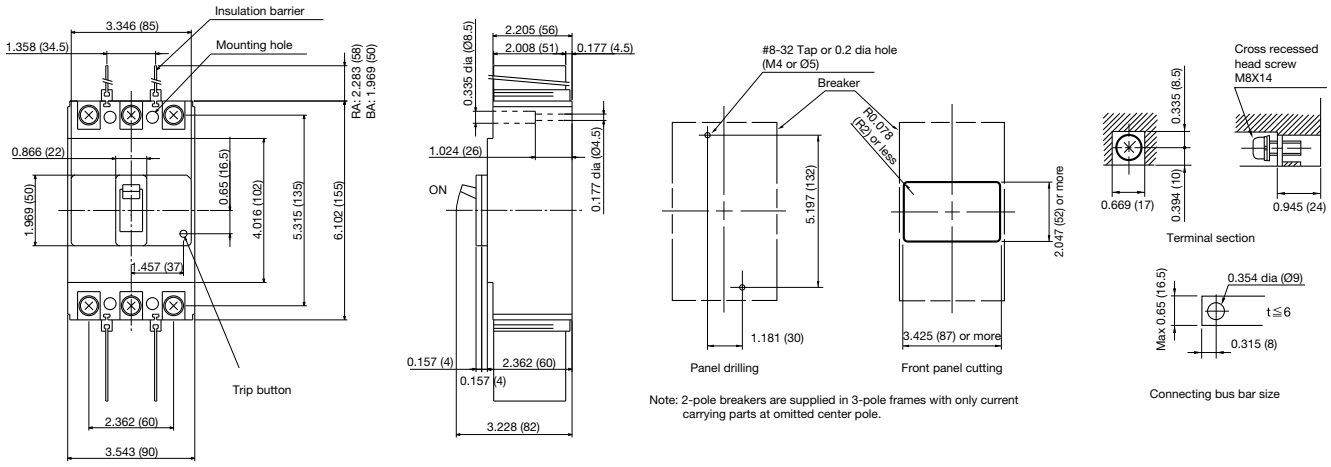
● SA102BAUL/□, SA103BAUL/□, SA102RAUL/□, SA103RAUL/□, SG103BAUL/□