Application of Solar Cell Integrated Roofing Material at Railway Stations

Kaname Senda
Yoshirou Makino

1. Introduction

At present, countermeasures against global environment problems such as, global warming, are well publicized. In an effort to address these environmental concerns, electric railway companies are implementing state of the art strategies, which utilize clean energy sources.

Various slate materials are used on the platform roofs of railway stations and these materials typically maintain their structural integrity for approximately 10 to 20 years. Currently, stations planning to undergo slate roof renovation are integrating solar cell modules into traditional roof materials in order to generate clean energy. This system is expected to become into widely adopted in the near future because it promotes the effective use of platform roof space, which occupies a substantial part of a station.

This paper will describe a power generation system, which uses amorphous silicon solar cell modules that are integrated with roof materials. The performance of the Meidaimae Station and the Wakabadai Station of Keio Electric Railway Co. Ltd. will be described as an example of this clean energy system.

Figure 1 depicts platform roofs with integrated solar cell modules.

Fig.1 Appearance of solar cell modules integrated into platform roofs at a railway station

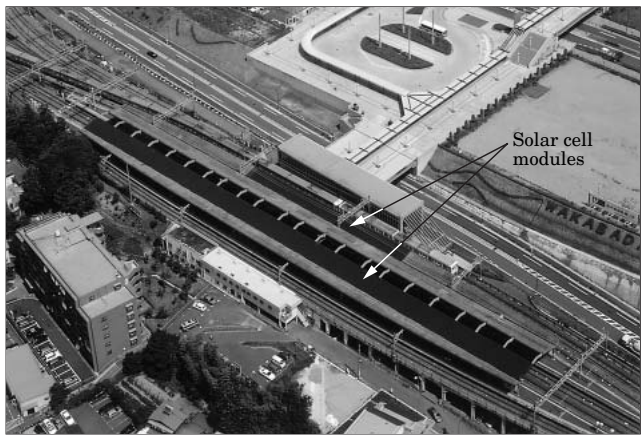

2. Features of Roof Materials Integrated with Solar Cell Modules

Solar cell modules, many of which are now used for power generation, are classified roughly into two categories based on the cell material: one comprised of crystal silicon and another comprised of amorphous silicon.

The crystal silicon solar cell module generally has a panel-like structure. The front surface of the cell is covered with tempered glass. The rear surface is enclosed with a weatherproof tetra resin film, and covered with a fireproof board as the roof material.

In contrast, amorphous silicon solar cell modules have a quite different structure. These cells consist of a piece of stainless steel foil filmed with amorphous silicon, which is fastened to a plate material (e.g. steel) and enclosed with a durable film material. Despite these noticeable differences, the amorphous silicon solar cell modules have the same panel-like structure as the crystal silicon solar cell module (i.e. the front surface of the cell is covered with tempered glass and the rear surface is enclosed with a tetra resin film).

The solar cell modules utilized at this time in the two stations are comprised of amorphous silicon solar cells, which are secured to a steel plate. This system has the following features:

(1) When integrated into the roof material, the solar cell module is lighter than those cells with the tempered glass panel-like structure The mass per unit area of the solar cell module with framework members is 7.2 kg/m^2, which is roughly half the density of a comparable tempered glass type panel structure. Therefore, integrating modules into the roof material allows for roofs to be renovated without the need to reinforce the existing roof support structure.

(2) Roof surface temperatures may reach 60 to 80°C during the summer. Generally, the output power of the crystal silicon solar cell shows a dramatic, negative relationship to temperature. This negative relationship is less pronounced when the amorphous silicon solar cells are utilized by aniel effect. Therefore, the photo-voltaic capacity of the

cell is greater during summer and less during winter.

(3) Less energy is required for manufacturing the amorphous silicon cells than required for producing the crystal silicon solar cells. Resource and energy saving manufacturing of the cells is possible because the required temperature for the manufacturing process is low. In this process, amorphous silicon thin film is accumulated on a substrate by decomposing a silane based source gas in a vacuum. The process has a short energy payback time (EPT: a value of the energy required for manufacturing a solar cell divided by the power generated by the cell) and a significant energy creating effect.

In contrast to the features of the secured-on-steel-plate type amorphous silicon solar cell, which are described above, the crystal silicon solar cell is characterized by having a better conversion efficiency. In currently available solar cells, the crystal silicon solar cell has a conversion efficiency ranging from 12 to 15 %, while the amorphous silicon solar cell has a conversion efficiency ranging from 8 to 10 %.

In the two railway station examples presented in this paper, the secured-on-steel-plate type amorphous silicon solar cell module was adopted. The decision to utilize these modules was based upon the amount available area of renovated roofs pace, the desire to renovate without having to reinforce the existing roof support material, and the desire to complete the renovation in a timely manner.

3. Specifications and Characteristics of Solar Cell Modules

In the two examples under investigation, amorphous silicon solar cells were applied to the modules and integrated with roof materials. Depending on the shapes of the existing platform roofs, two types of the modules were used. The specifications and characteristics of each type solar cell module are shown in Table 1.

Table 1 Specifications and characteristics of solar cell modules combined with roof materials

Item \ Classification		Long size solar cell module	Short size solar cell module
Dimension	Length	5,440 mm	4,000 mm
	Width	525 mm	525 mm
Mass		23.3 kg	17.1 kg
Rated maximum output power		153.0 W	109.0 W
Rated maximum output voltage		31.5 V	22.5 V
Rated maximum output current		4.84 A	4.84 A
Rated open circuit voltage		42.8 V	30.6 V
Rated short circuit current		5.68 A	5.68 A
Number of solar cells		21 in series	15 in series

4. Structure of Solar Cell Module

The structure of the solar cell module is illustrated in Fig. 2. The module consists of a steel, 0.8 mm thick roof plate, a stainless steel plate with a filmed, amorphous silicon solar cell, which is secured on the roof plate, and a fluorocarbon resin film to adhere both plates together in order to provide protection. The shape of this system is similar to that of the typical roof steel plate and the contained solar cells are virtually imperceptible. Figure 3 depicts the solar cell modules installed on a platform roof.

Figure 4 illustrates the architecture of the roof with

Fig.2 Structure of solar cell module

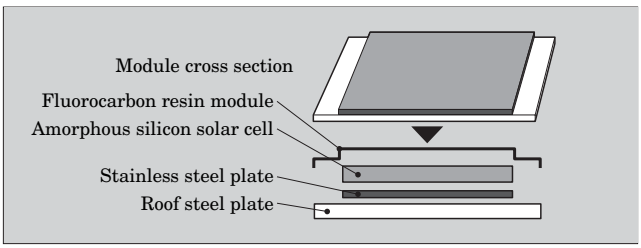

Fig.3 Appearance of solar cell modules installed on platform roof

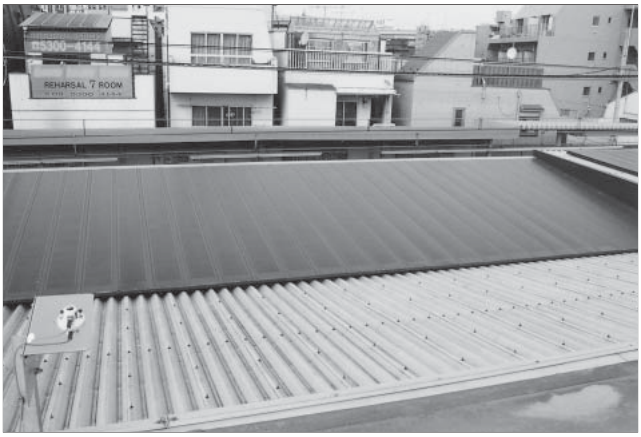

Fig.4 Architecture of platform roof with solar cell modules installed

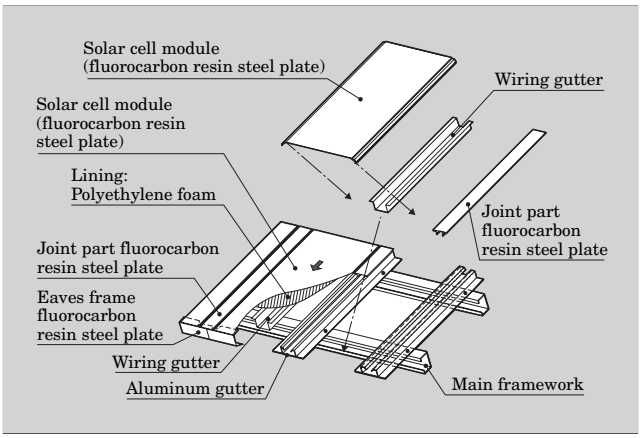

the solar cell modules installed. The solar cell part is caught between the gutters fastened to the main framework and further secured by the joint parts.

Output wiring from a necessary number of solar cell modules is connected in series through the wiring gutters. In addition, each of the plus and minus cables from the serially connected group is wired through a cable duct to a connection box under the platform roof.

5. Application Example of Two Railway Stations

This photovoltaic power generation system was planned and installed based on the "photo-voltaic power generation field test operation" of New Energy and Industrial Technology Development Organization.

The Meidaimae station system has a rated capacity of 30 kW, and consists of the above-mentioned eighteen groups of ten serial 153 kW solar cell modules and two groups of fourteen serial 109 kW modules. Figure 5 shows the arrangement of the solar cell modules installed on the platform roofs of the Meidaimae station. For each 10 kW of output from a serial group of solar cell modules, a connection box is installed under the platform roof. Each of these is

Fig.5 Arrangement of solar cell modules on platform roof

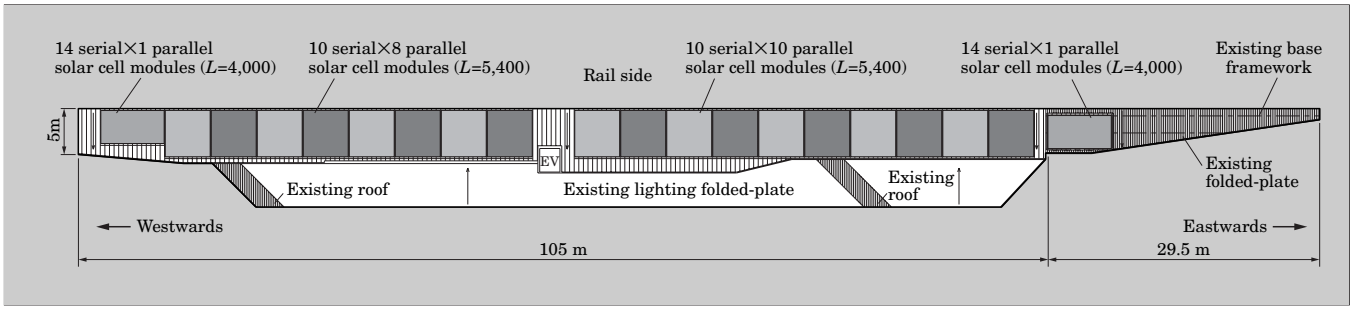

Fig.6 Photovoltaic power generation system in railway station

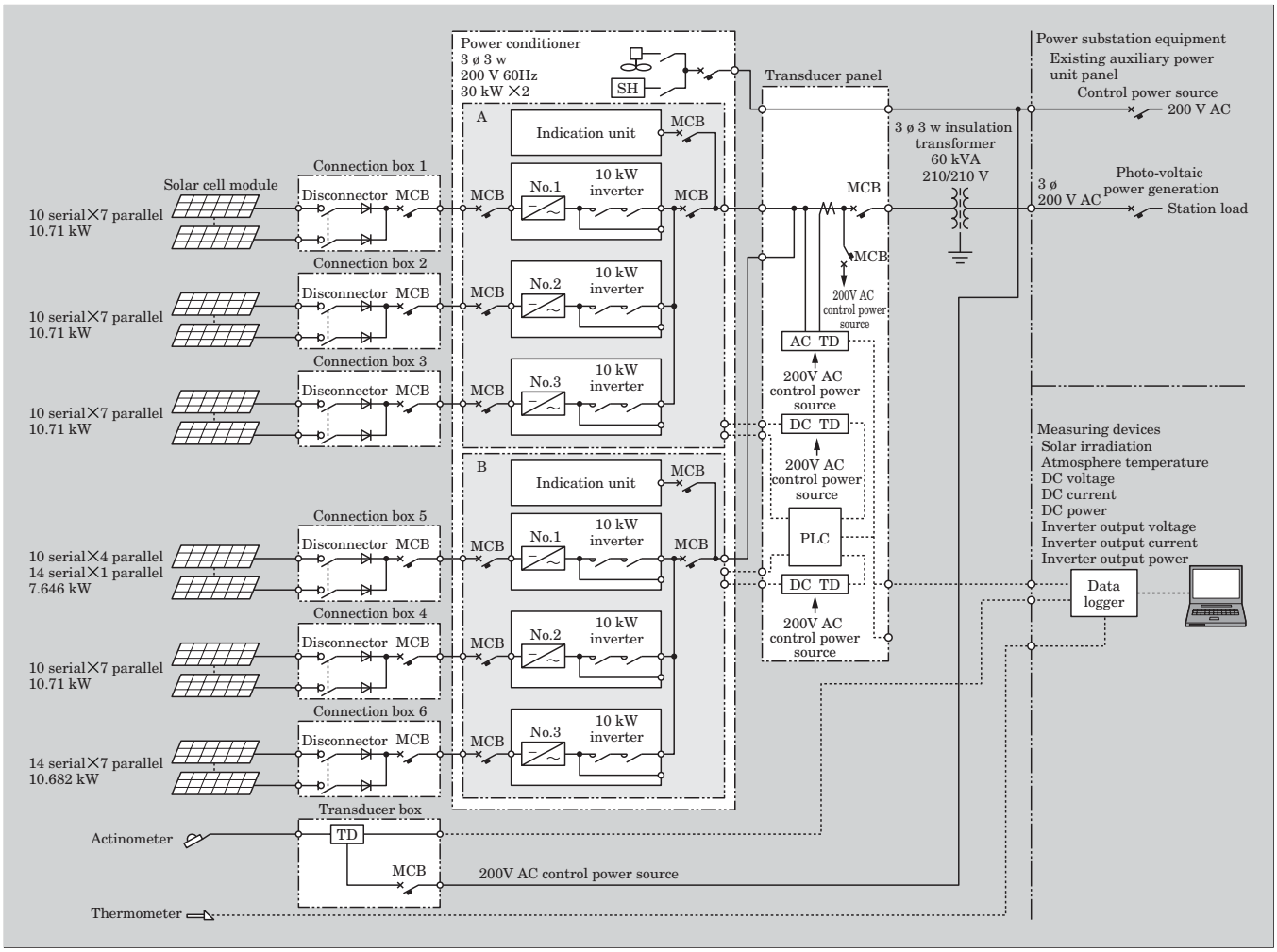

connected to a corresponding 10 kW unit inverter. It is important to note that when wiring cables, one should utilize existing cable racks and troughs in order to reduce construction costs.

The Wakabadai station system has a rated capacity of 60 kW, which represents a configuration that is approximately two times the capacity of the Meidaimae station system. Figure 6 details the structure of the photovoltaic power generation system at the Wakabadai station.

In order to most efficiently conduct platform roof renovation and concurrent solar cell module installation, the following work restrictions are recommended during the operating hours of railway stations:

(1) In high-use stations, roof construction work should not be conducted during business hours.
(2) If work is to be conducted at night, consideration of noise to neighboring businesses and residences is necessary
(3) When there are electric feeders or high voltage distribution lines over the platform roofs, the electric power supply should be turned off in order to prevent electric shock
(4) During periods of inactivity, platform roofs should be protected against rain

In order to complete the work in a timely manner and in accordance with the above mentioned work restrictions, the construction plan should be carefully studied

Because the Meidaimae station has no electric room and the Wakabadai station's electric room has little space, the inverters in the both stations are placed in outdoor spec switchboards.

6. Investigation into Effects of Train Electromagnetic Noise to Solar Cells

Before applying the solar cell modules to the platform roofs, the effects of electromagnetic noise from trains passing nearby or trolley wires were investigated at the Wakabadai station. The Wakabadai station is a logical location for such an investigation as express trains pass through this station at an accelerated pace.

In order to conduct this investigation, a board mounted with the solar cell modules combined with roof materials and electric and magnetic field sensors was fixed on the platform roof and monitoring devices were installed at the end of the platform. Data were collected during business operation. The results indicate that electromagnetic wave levels on the platform roof reached an electric field of several V/m and a magnetic field of several mA/m, and these levels are less than one tenth of the accepted safety standard level to the human body. The noise voltage between the solar cell output leads was about 200 mV and the noise current was below the measuring limit of 2 mA. These levels of electromagnetic noise did not impede the functioning of the solar cells.

7. Field Data

The chart in Fig. 7 shows each monthly utilization factor (a value of the system output energy divided by the product of the rated output power of solar cell array and the operation time) of the photo-voltaic power generation systems in the Meidaimae and the Wakabadai stations from April 2001 to January 2002.

The average annual utilization factor is typically about 12 % when solar cells are installed at the most suitable tilt angle. Values obtained from the present study were 6.1 to 14.4 % at the Meidaimae station system and 8.4 to 17.4 % at the Wakabadai station system.

Both stations have solar cell modules installed on their platform roofs, and the tilt angles ranged from 7 to 10 degrees at the Meidaimae station and were 15 degrees at the Wakabadai station. Therefore, these data suggest that the system utilization factors are lower than would be expected if the most suitable tilt angle (approximately 30 degrees) was utilized. Utilizing this tilt angle enables the solar cell modules to receive a maximum annual amount of solar irradiation. The reason why the system utilization factors are greatest in July is due to the fact that the amount of solar irradiation in July is approximately 1.5 times the normal value.

The following factors are thought to have caused the difference between the system utilization factors of the Meidaimae and the Wakabadai stations:

(1) The tilt angle of the platform roof of the Meidaimae station is less than that of the Wakabadai station. Also, the roof of the Meidaimae station faces to southeast, while the roof of the Wakabadai station faces almost due south.
(2) The Meidaimae station is located in a commercial area and buildings around the station, though low-rise, give an effect on the solar irradiation. In contrast, the Wakabadai station is situated in a good, open location. There are no other buildings around it, which would interfere with solar irradiation.

The calculated difference caused by the tilt angle is minor when compared to the overriding effect of impeded solar irradiation.

System utilization factors observed from field test data indicate that the photovoltaic power generation systems in the both stations are operating smoothly. With the accumulation of long-term data, the photovoltaic power generation systems installed on the station platform roofs are expected to be favorably evaluated in the future.

8. Conclusion

The station platform roof in railway represents a

Fig.7 Transition of system utilization factor

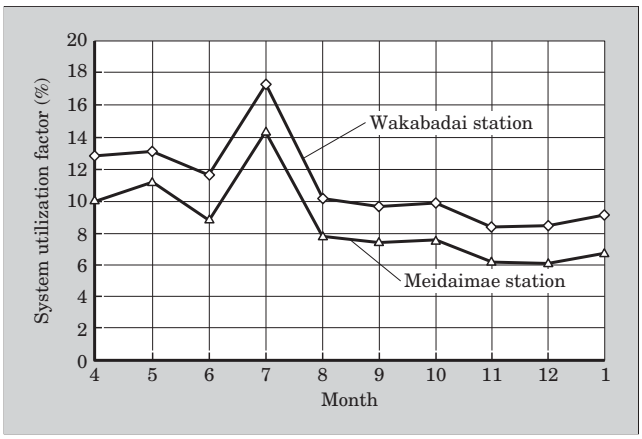

space that is seldom utilized but has great potential to be put to an effective use. If the price of the solar cell modules combined with roof materials is further reduced in future, the photovoltaic power generation systems on the platform roofs are believed to become widely used.

When considering the future of the global environment, reliance on fossil fuels for power generation should be reduced as much as possible. Fuji Electric promotes the establishment of energy-conservation and effective use of new, clean energy systems including, but not limited to, photovoltaic power generation.